Bangladesh Army University of Engineering & Technology
Department of Electrical & Electronic Engineering

Lecture: 19 - 20

Course Code: EEE 1261

Course Title: Electronic Devices and Circuits

Course Teacher: Ferdous Farjana

Designation: Lecturer, Dept. of EEE, BAUET

Contents

- ❖Operational Amplifiers: Introduction
- ❖Operational Amplifiers
- ❖Ideal Op Amp
- ❖Inverting Amplifier
- ❖Noninverting Amplifier
- ❖Summing Amplifier
- ❖Difference Amplifier
- ❖Cascaded Op Amp Circuits
- ❖Mathematical Problems

Reference Books

- **Fundamentals of Electric circuits: Charles K. Alexander, Matthew N. O Sadiku.**
- Electronic Devices and Circuit Theory: Robert L. Boylestad and Louis Nashelsky.
- Electronic Principles: Albert P. Malvino.
- Micro Electronics Circuits: Adel S. Sedra & Keneth C. Smith: Oxford University Press.
- Operational Amplifiers and Linear Integrated Circuits: Robert F. Coughlin: Prentice Hall of India Private Limited.

Chapter 5: Operational Amplifiers

Fundamental of Electric Circuits – Charles K. Alexander, Matthew N. O. Sadiku

5.1 Introduction

The term operational amplifier was introduced in 1947 by John Ragazzini and his colleagues, in their work on analog computers for the National Defense Research Council after World War II. The first op amps used vacuum tubes rather than transistors.

An op amp may also be regarded as a voltage amplifier with very high gain.

Having learned the basic laws and theorems for circuit analysis, we are now ready to study an active circuit element of paramount importance: the *operational amplifier*, or *op amp* for short. The op amp is a versatile circuit building block.

The op amp is an electronic unit that behaves like a voltage-controlled voltage source.

It can also be used in making a voltage- or current-controlled current source. An op amp can sum signals, amplify a signal, integrate it, or differentiate it. The ability of the op amp to perform these mathematical operations is the reason it is called an *operational amplifier.* It is also the reason for the widespread use of op amps in analog design. Op amps are popular in practical circuit designs because they are versatile, inexpensive, easy to use, and fun to work with.

We begin by discussing the ideal op amp and later consider the nonideal op amp. Using nodal analysis as a tool, we consider ideal op amp circuits such as the inverter, voltage follower, summer, and difference amplifier. We will also analyze op amp circuits with *PSpice*. Finally, we learn how an op amp is used in digital-to-analog converters and instrumentation amplifiers.

5.2 Operational Amplifiers

An operational amplifier is designed so that it performs some mathematical operations when external components, such as resistors and capacitors, are connected to its terminals. Thus,

> An **op amp** is an active circuit element designed to perform mathematical operations of addition, subtraction, multiplication, division, differentiation, and integration.

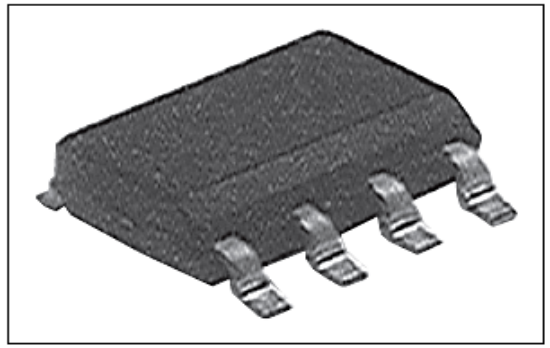

Figure 5.1
A typical operational amplifier.
Courtesy of Tech America.

The op amp is an electronic device consisting of a complex arrangement of resistors, transistors, capacitors, and diodes. A full discussion of what is inside the op amp is beyond the scope of this book. It will suffice to treat the op amp as a circuit building block and simply study what takes place at its terminals.

Op amps are commercially available in integrated circuit packages in several forms. Figure 5.1 shows a typical op amp package. A typical one is the eight-pin dual in-line package (or DIP), shown in Fig. 5.2(a). Pin or terminal 8 is unused, and terminals 1 and 5 are of little concern to us. The five important terminals are:

The pin diagram in Fig. 5.2(a) corresponds to the 741 general-purpose op amp made by Fairchild Semiconductor.

1. The inverting input, pin 2.
2. The noninverting input, pin 3.
3. The output, pin 6.
4. The positive power supply V^+, pin 7.
5. The negative power supply V^-, pin 4.

The circuit symbol for the op amp is the triangle in Fig. 5.2(b); as shown, the op amp has two inputs and one output. The inputs are

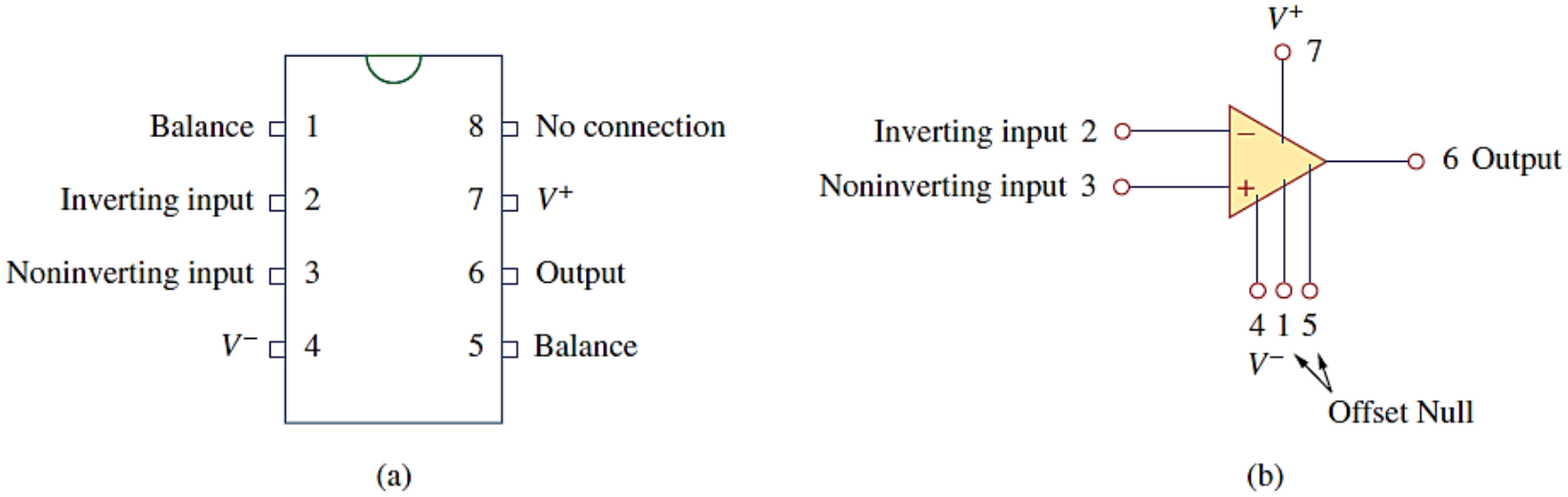

Figure 5.2
A typical op amp: (a) pin configuration, (b) circuit symbol.

marked with minus (−) and plus (+) to specify *inverting* and *noninverting* inputs, respectively. An input applied to the noninverting terminal will appear with the same polarity at the output, while an input applied to the inverting terminal will appear inverted at the output.

As an active element, the op amp must be powered by a voltage supply as typically shown in Fig. 5.3. Although the power supplies are often ignored in op amp circuit diagrams for the sake of simplicity, the power supply currents must not be overlooked. By KCL,

$$i_o = i_1 + i_2 + i_+ + i_- \tag{5.1}$$

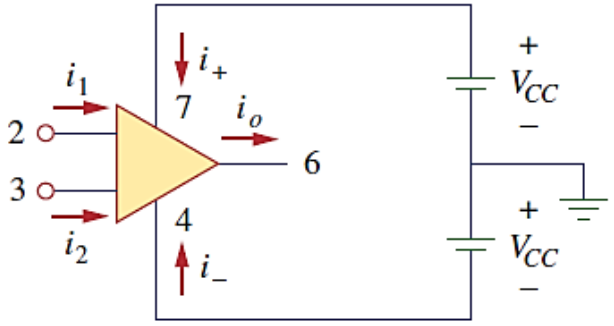

Figure 5.3
Powering the op amp.

The equivalent circuit model of an op amp is shown in Fig. 5.4. The output section consists of a voltage-controlled source in series with the output resistance R_o. It is evident from Fig. 5.4 that the input resistance R_i is the Thevenin equivalent resistance seen at the input terminals, while the output resistance R_o is the Thevenin equivalent resistance seen at the output. The differential input voltage v_d is given by

$$v_d = v_2 - v_1 \tag{5.2}$$

where v_1 is the voltage between the inverting terminal and ground and v_2 is the voltage between the noninverting terminal and ground. The op amp senses the difference between the two inputs, multiplies it by the gain A, and causes the resulting voltage to appear at the output. Thus, the output v_o is given by

$$\boxed{v_o = Av_d = A(v_2 - v_1)} \tag{5.3}$$

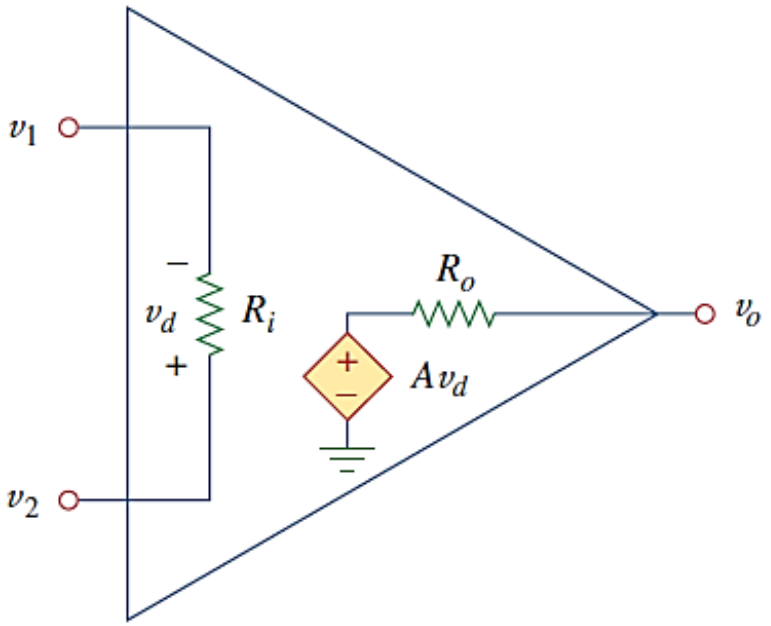

Figure 5.4
The equivalent circuit of the nonideal op amp.

A is called the *open-loop voltage gain* because it is the gain of the op amp without any external feedback from output to input. Table 5.1

TABLE 5.1

Typical ranges for op amp parameters.

Parameter	Typical range	Ideal values
Open-loop gain, A	10^5 to 10^8	∞
Input resistance, R_i	10^5 to $10^{13}\,\Omega$	$\infty\,\Omega$
Output resistance, R_o	10 to 100 Ω	$0\,\Omega$
Supply voltage, V_{CC}	5 to 24 V	

Sometimes, voltage gain is expressed in decibels (dB), as discussed in Chapter 14.

$$A\ \text{dB} = 20 \log_{10} \text{A}$$

shows typical values of voltage gain A, input resistance R_i, output resistance R_o, and supply voltage V_{CC}.

The concept of feedback is crucial to our understanding of op amp circuits. A negative feedback is achieved when the output is fed back to the inverting terminal of the op amp. As Example 5.1 shows, when there is a feedback path from output to input, the ratio of the output voltage to the input voltage is called the *closed-loop gain*. As a result of the negative feedback, it can be shown that the closed-loop gain is almost insensitive to the open-loop gain A of the op amp. For this reason, op amps are used in circuits with feedback paths.

A practical limitation of the op amp is that the magnitude of its output voltage cannot exceed $|V_{CC}|$. In other words, the output voltage is dependent on and is limited by the power supply voltage. Figure 5.5 illustrates that the op amp can operate in three modes, depending on the differential input voltage v_d:

1. Positive saturation, $v_o = V_{CC}$.
2. Linear region, $-V_{CC} \leq v_o = Av_d \leq V_{CC}$.
3. Negative saturation, $v_o = -V_{CC}$.

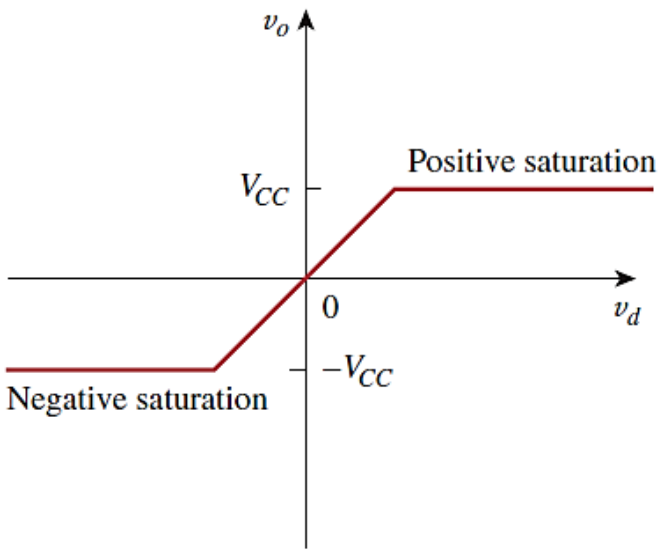

Figure 5.5
Op amp output voltage v_o as a function of the differential input voltage v_d.

If we attempt to increase v_d beyond the linear range, the op amp becomes saturated and yields $v_o = V_{CC}$ or $v_o = -V_{CC}$. Throughout this book, we will assume that our op amps operate in the linear mode. This means that the output voltage is restricted by

$$-V_{CC} \leq v_o \leq V_{CC} \tag{5.4}$$

Throughout this book, we assume that an op amp operates in the linear range. Keep in mind the voltage constraint on the op amp in this mode.

Although we shall always operate the op amp in the linear region, the possibility of saturation must be borne in mind when one designs with op amps, to avoid designing op amp circuits that will not work in the laboratory.

5.3 Ideal Op Amp

To facilitate the understanding of op amp circuits, we will assume ideal op amps. An op amp is ideal if it has the following characteristics:

1. Infinite open-loop gain, $A \simeq \infty$.
2. Infinite input resistance, $R_i \simeq \infty$.
3. Zero output resistance, $R_o \simeq 0$.

An **ideal op amp** is an amplifier with infinite open-loop gain, infinite input resistance, and zero output resistance.

Although assuming an ideal op amp provides only an approximate analysis, most modern amplifiers have such large gains and input impedances that the approximate analysis is a good one. Unless stated otherwise, we will assume from now on that every op amp is ideal.

For circuit analysis, the ideal op amp is illustrated in Fig. 5.8, which is derived from the nonideal model in Fig. 5.4. Two important characteristics of the ideal op amp are:

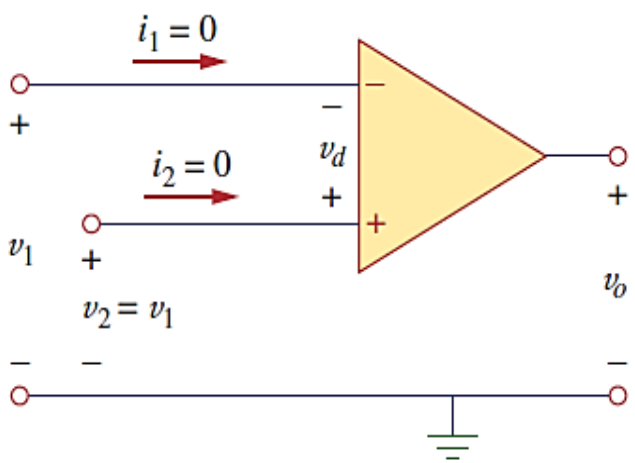

Figure 5.8
Ideal op amp model.

1. The currents into both input terminals are zero:

$$\boxed{i_1 = 0, \qquad i_2 = 0} \tag{5.5}$$

   This is due to infinite input resistance. An infinite resistance between the input terminals implies that an open circuit exists there and current cannot enter the op amp. But the output current is not necessarily zero according to Eq. (5.1).

2. The voltage across the input terminals is equal to zero; i.e.,

$$v_d = v_2 - v_1 = 0 \tag{5.6}$$

The two characteristics can be exploited by noting that for voltage calculations the input port behaves as a short circuit, while for current calculations the input port behaves as an open circuit.

$$\boxed{v_1 = v_2} \tag{5.7}$$

Thus, an ideal op amp has zero current into its two input terminals and the voltage between the two input terminals is equal to zero. Equations (5.5) and (5.7) are extremely important and should be regarded as the key handles to analyzing op amp circuits.

5.4 Inverting Amplifier

In this and the following sections, we consider some useful op amp circuits that often serve as modules for designing more complex circuits. The first of such op amp circuits is the inverting amplifier shown in Fig. 5.10. In this circuit, the noninverting input is grounded, v_i is connected to the inverting input through R_1, and the feedback resistor R_f is connected between the inverting input and output. Our goal is to obtain the relationship between the input voltage v_i and the output voltage v_o. Applying KCL at node 1,

$$i_1 = i_2 \quad \Rightarrow \quad \frac{v_i - v_1}{R_1} = \frac{v_1 - v_o}{R_f} \tag{5.8}$$

But $v_1 = v_2 = 0$ for an ideal op amp, since the noninverting terminal is grounded. Hence,

$$\frac{v_i}{R_1} = -\frac{v_o}{R_f}$$

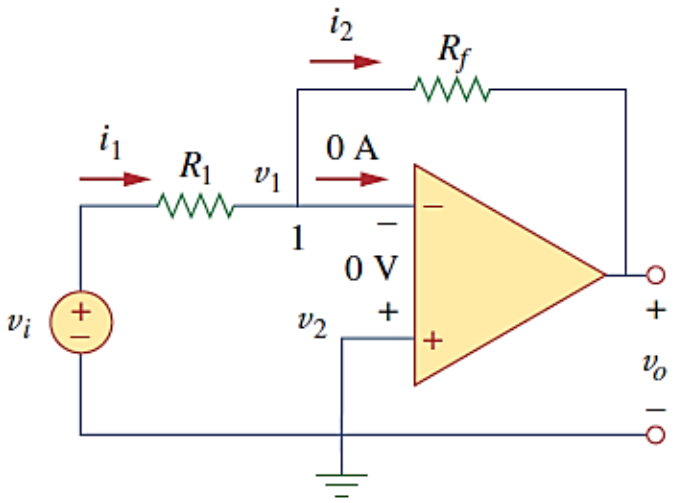

Figure 5.10
The inverting amplifier.

A key feature of the inverting amplifier is that both the input signal and the feedback are applied at the inverting terminal of the op amp.

or

$$\boxed{v_o = -\frac{R_f}{R_1} v_i} \tag{5.9}$$

Note there are two types of gains: The one here is the closed-loop voltage gain A_v, while the op amp itself has an open-loop voltage gain A.

The voltage gain is $A_v = v_o/v_i = -R_f/R_1$. The designation of the circuit in Fig. 5.10 as an *inverter* arises from the negative sign. Thus,

An inverting amplifier reverses the polarity of the input signal while amplifying it.

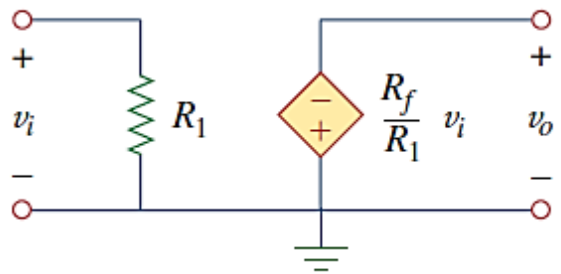

Figure 5.11
An equivalent circuit for the inverter in Fig. 5.10.

Notice that the gain is the feedback resistance divided by the input resistance which means that the gain depends only on the external elements connected to the op amp. In view of Eq. (5.9), an equivalent circuit for the inverting amplifier is shown in Fig. 5.11. The inverting amplifier is used, for example, in a current-to-voltage converter.

Example 5.3

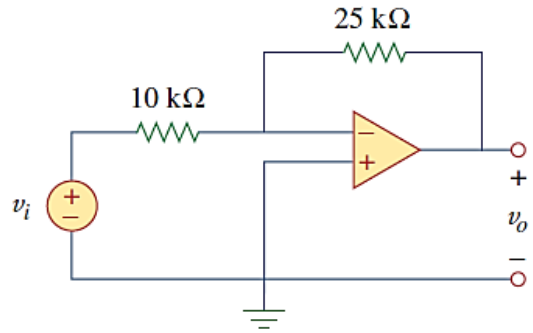

Figure 5.12
For Example 5.3.

Refer to the op amp in Fig. 5.12. If $v_i = 0.5$ V, calculate: (a) the output voltage v_o, and (b) the current in the 10-kΩ resistor.

Solution:

(a) Using Eq. (5.9),

$$\frac{v_o}{v_i} = -\frac{R_f}{R_1} = -\frac{25}{10} = -2.5$$

$$v_o = -2.5v_i = -2.5(0.5) = -1.25 \text{ V}$$

(b) The current through the 10-kΩ resistor is

$$i = \frac{v_i - 0}{R_1} = \frac{0.5 - 0}{10 \times 10^3} = 50\ \mu\text{A}$$

Practice Problem 5.3

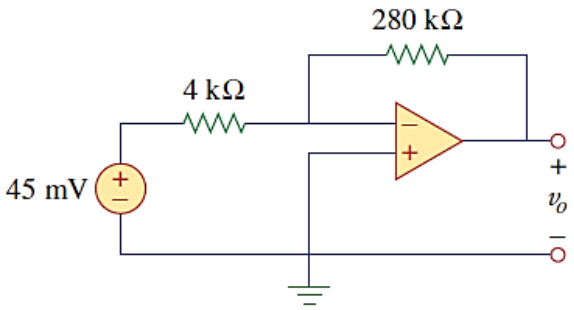

Figure 5.13
For Practice Prob. 5.3.

Find the output of the op amp circuit shown in Fig. 5.13. Calculate the current through the feedback resistor.

Answer: −3.15 V, 26.25 μA.

Example 5.4

Determine v_o in the op amp circuit shown in Fig. 5.14.

Solution:

Applying KCL at node a,

$$\frac{v_a - v_o}{40\ \text{k}\Omega} = \frac{6 - v_a}{20\ \text{k}\Omega}$$

$$v_a - v_o = 12 - 2v_a \quad \Rightarrow \quad v_o = 3v_a - 12$$

But $v_a = v_b = 2$ V for an ideal op amp, because of the zero voltage drop across the input terminals of the op amp. Hence,

$$v_o = 6 - 12 = -6\ \text{V}$$

Notice that if $v_b = 0 = v_a$, then $v_o = -12$, as expected from Eq. (5.9).

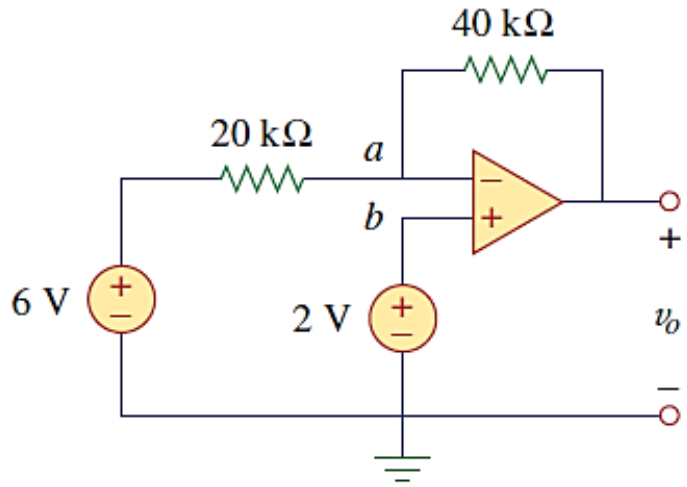

Figure 5.14
For Example 5.4.

5.5 Noninverting Amplifier

Another important application of the op amp is the noninverting amplifier shown in Fig. 5.16. In this case, the input voltage v_i is applied directly at the noninverting input terminal, and resistor R_1 is connected

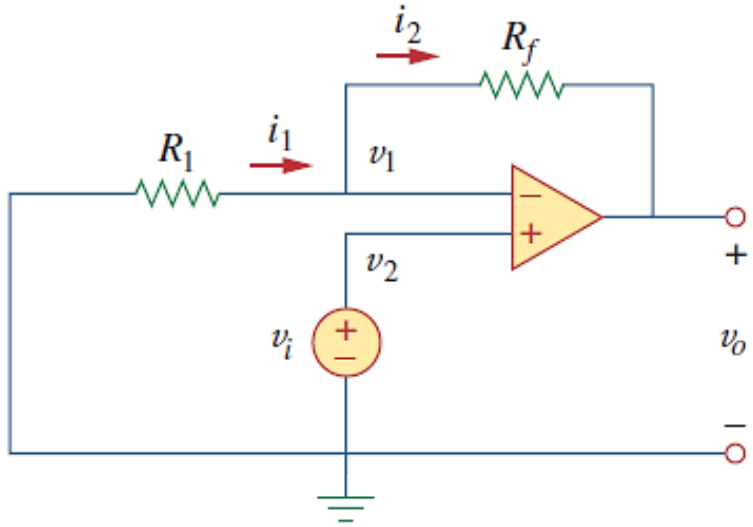

Figure 5.16
The noninverting amplifier.

between the ground and the inverting terminal. We are interested in the output voltage and the voltage gain. Application of KCL at the inverting terminal gives

$$i_1 = i_2 \quad \Rightarrow \quad \frac{0 - v_1}{R_1} = \frac{v_1 - v_o}{R_f} \tag{5.10}$$

But $v_1 = v_2 = v_i$. Equation (5.10) becomes

$$\frac{-v_i}{R_1} = \frac{v_i - v_o}{R_f}$$

or

$$\boxed{v_o = \left(1 + \frac{R_f}{R_1}\right) v_i} \tag{5.11}$$

The voltage gain is $A_v = v_o/v_i = 1 + R_f/R_1$, which does not have a negative sign. Thus, the output has the same polarity as the input.

A noninverting amplifier is an op amp circuit designed to provide a positive voltage gain.

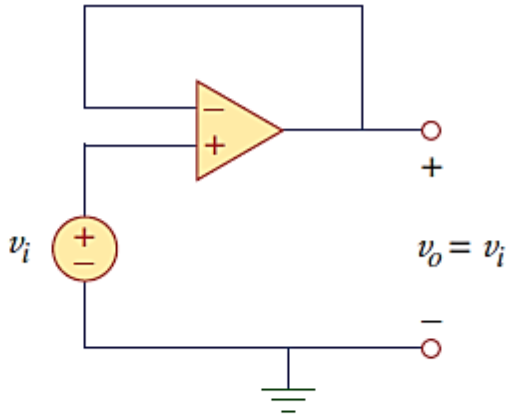

Figure 5.17
The voltage follower.

Again we notice that the gain depends only on the external resistors.

Notice that if feedback resistor $R_f = 0$ (short circuit) or $R_1 = \infty$ (open circuit) or both, the gain becomes 1. Under these conditions ($R_f = 0$ and $R_1 = \infty$), the circuit in Fig. 5.16 becomes that shown in Fig. 5.17, which is called a *voltage follower* (or *unity gain amplifier*) because the output follows the input. Thus, for a voltage follower

$$v_o = v_i \tag{5.12}$$

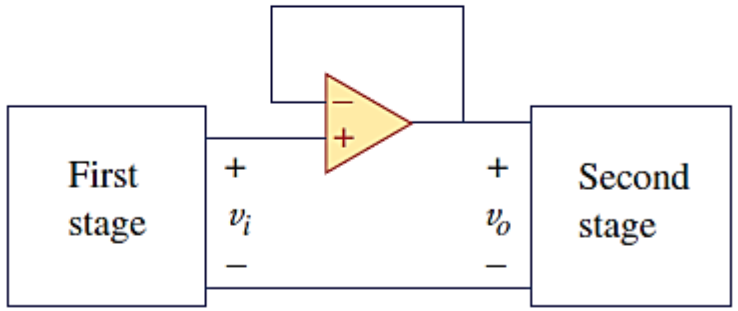

Figure 5.18
A voltage follower used to isolate two cascaded stages of a circuit.

Such a circuit has a very high input impedance and is therefore useful as an intermediate-stage (or buffer) amplifier to isolate one circuit from another, as portrayed in Fig. 5.18. The voltage follower minimizes interaction between the two stages and eliminates interstage loading.

Example 5.5

For the op amp circuit in Fig. 5.19, calculate the output voltage v_o.

Solution:

We may solve this in two ways: using superposition and using nodal analysis.

METHOD 1 Using superposition, we let

$$v_o = v_{o1} + v_{o2}$$

where v_{o1} is due to the 6-V voltage source, and v_{o2} is due to the 4-V input. To get v_{o1}, we set the 4-V source equal to zero. Under this condition, the circuit becomes an inverter. Hence Eq. (5.9) gives

$$v_{o1} = -\frac{10}{4}(6) = -15 \text{ V}$$

To get v_{o2}, we set the 6-V source equal to zero. The circuit becomes a noninverting amplifier so that Eq. (5.11) applies.

$$v_{o2} = \left(1 + \frac{10}{4}\right)4 = 14 \text{ V}$$

Thus,

$$v_o = v_{o1} + v_{o2} = -15 + 14 = -1 \text{ V}$$

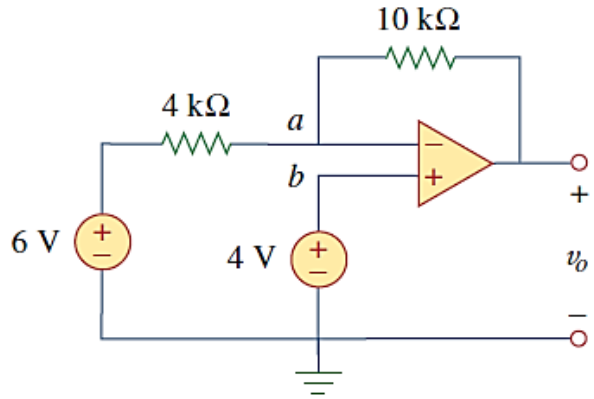

Figure 5.19
For Example 5.5.

METHOD 2 Applying KCL at node a,

$$\frac{6 - v_a}{4} = \frac{v_a - v_o}{10}$$

But $v_a = v_b = 4$, and so

$$\frac{6 - 4}{4} = \frac{4 - v_o}{10} \quad \Rightarrow \quad 5 = 4 - v_o$$

or $v_o = -1$ V, as before.

Practice Problem 5.5

Calculate v_o in the circuit of Fig. 5.20.

Answer: 7 V.

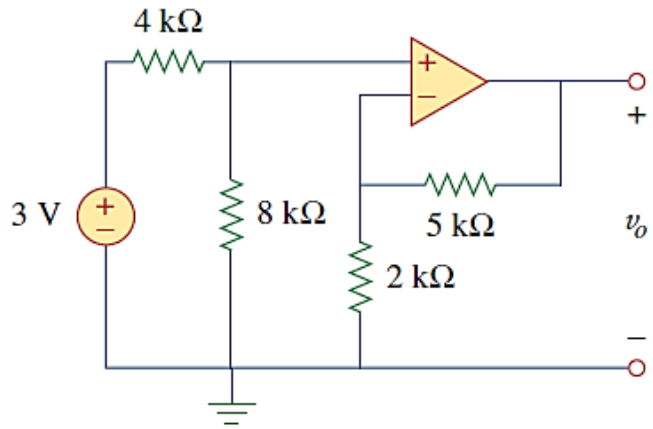

Figure 5.20
For Practice Prob. 5.5.

5.6 Summing Amplifier

Besides amplification, the op amp can perform addition and subtraction. The addition is performed by the summing amplifier covered in this section; the subtraction is performed by the difference amplifier covered in the next section.

> A summing amplifier is an op amp circuit that combines several inputs and produces an output that is the weighted sum of the inputs.

The summing amplifier, shown in Fig. 5.21, is a variation of the inverting amplifier. It takes advantage of the fact that the inverting configuration can handle many inputs at the same time. We keep in mind

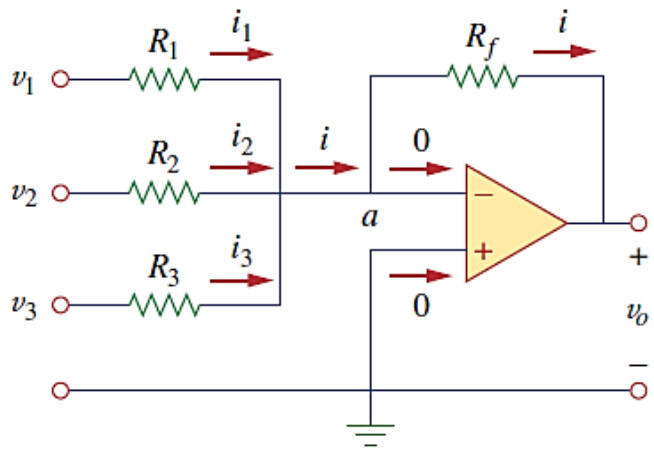

Figure 5.21
The summing amplifier.

that the current entering each op amp input is zero. Applying KCL at node a gives

$$i = i_1 + i_2 + i_3 \tag{5.13}$$

But

$$\begin{aligned} i_1 &= \frac{v_1 - v_a}{R_1}, \quad i_2 = \frac{v_2 - v_a}{R_2} \\ i_3 &= \frac{v_3 - v_a}{R_3}, \quad i = \frac{v_a - v_o}{R_f} \end{aligned} \tag{5.14}$$

We note that $v_a = 0$ and substitute Eq. (5.14) into Eq. (5.13). We get

$$\boxed{v_o = -\left(\frac{R_f}{R_1}v_1 + \frac{R_f}{R_2}v_2 + \frac{R_f}{R_3}v_3\right)} \tag{5.15}$$

indicating that the output voltage is a weighted sum of the inputs. For this reason, the circuit in Fig. 5.21 is called a *summer*. Needless to say, the summer can have more than three inputs.

Example 5.6

Calculate v_o and i_o in the op amp circuit in Fig. 5.22.

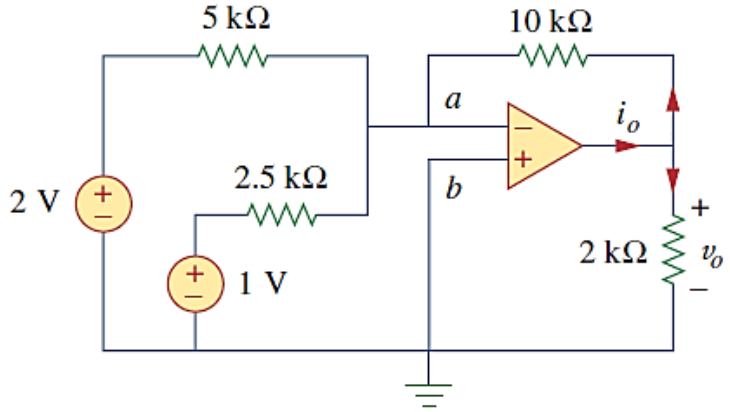

Figure 5.22
For Example 5.6.

Solution:

This is a summer with two inputs. Using Eq. (5.15) gives

$$v_o = -\left[\frac{10}{5}(2) + \frac{10}{2.5}(1)\right] = -(4 + 4) = -8 \text{ V}$$

The current i_o is the sum of the currents through the 10-kΩ and 2-kΩ resistors. Both of these resistors have voltage $v_o = -8$ V across them, since $v_a = v_b = 0$. Hence,

$$i_o = \frac{v_o - 0}{10} + \frac{v_o - 0}{2} \text{mA} = -0.8 - 4 = -4.8 \text{ mA}$$

Practice Problem 5.6

Find v_o and i_o in the op amp circuit shown in Fig. 5.23.

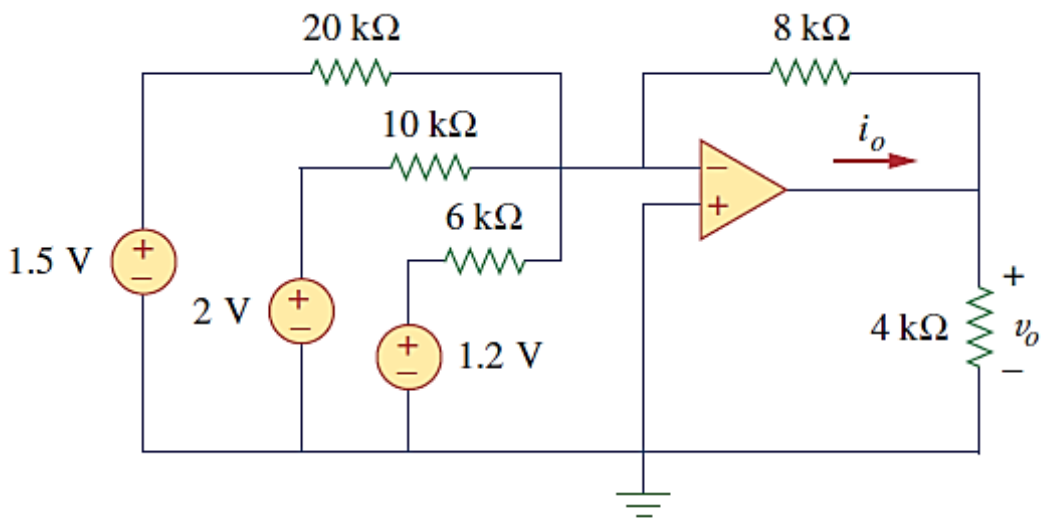

Figure 5.23
For Practice Prob. 5.6.

Answer: −3.8 V, −1.425 mA.

5.7 Difference Amplifier

Difference (or differential) amplifiers are used in various applications where there is a need to amplify the difference between two input signals. They are first cousins of the *instrumentation amplifier*, the most useful and popular amplifier, which we will discuss in Section 5.10.

The difference amplifier is also known as the *subtractor*, for reasons to be shown later.

A difference amplifier is a device that amplifies the difference between two inputs but rejects any signals common to the two inputs.

Consider the op amp circuit shown in Fig. 5.24. Keep in mind that zero currents enter the op amp terminals. Applying KCL to node a,

$$\frac{v_1 - v_a}{R_1} = \frac{v_a - v_o}{R_2}$$

or

$$v_o = \left(\frac{R_2}{R_1} + 1\right)v_a - \frac{R_2}{R_1}v_1 \tag{5.16}$$

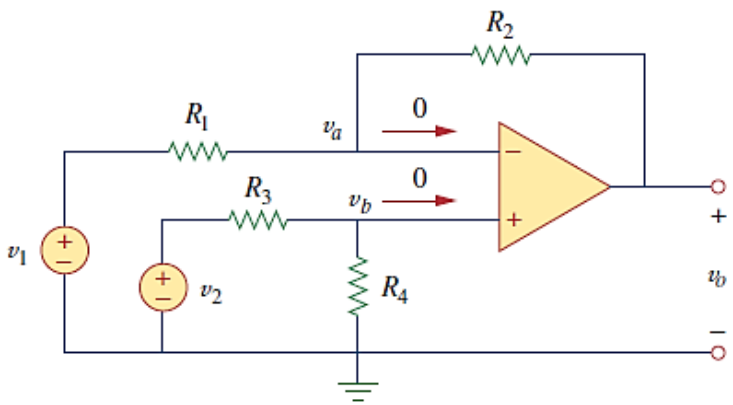

Figure 5.24
Difference amplifier.

Applying KCL to node b,

$$\frac{v_2 - v_b}{R_3} = \frac{v_b - 0}{R_4}$$

or

$$v_b = \frac{R_4}{R_3 + R_4} v_2 \tag{5.17}$$

But $v_a = v_b$. Substituting Eq. (5.17) into Eq. (5.16) yields

$$v_o = \left(\frac{R_2}{R_1} + 1\right)\frac{R_4}{R_3 + R_4} v_2 - \frac{R_2}{R_1} v_1$$

or

$$\boxed{v_o = \frac{R_2(1 + R_1/R_2)}{R_1(1 + R_3/R_4)} v_2 - \frac{R_2}{R_1} v_1} \tag{5.18}$$

Since a difference amplifier must reject a signal common to the two inputs, the amplifier must have the property that $v_o = 0$ when $v_1 = v_2$. This property exists when

$$\frac{R_1}{R_2} = \frac{R_3}{R_4} \tag{5.19}$$

Thus, when the op amp circuit is a difference amplifier, Eq. (5.18) becomes

$$v_o = \frac{R_2}{R_1}(v_2 - v_1) \tag{5.20}$$

If $R_2 = R_1$ and $R_3 = R_4$, the difference amplifier becomes a *subtractor*, with the output

$$v_o = v_2 - v_1 \tag{5.21}$$

5.8 Cascaded Op Amp Circuits

As we know, op amp circuits are modules or building blocks for designing complex circuits. It is often necessary in practical applications to connect op amp circuits in cascade (i.e., head to tail) to achieve a large overall gain. In general, two circuits are cascaded when they are connected in tandem, one behind another in a single file.

A cascade connection is a head-to-tail arrangement of two or more op amp circuits such that the output of one is the input of the next.

When op amp circuits are cascaded, each circuit in the string is called a *stage*; the original input signal is increased by the gain of the individual stage. Op amp circuits have the advantage that they can be cascaded without changing their input-output relationships. This is due to the fact that each (ideal) op amp circuit has infinite input resistance and zero output resistance. Figure 5.28 displays a block diagram representation of three op amp circuits in cascade. Since the output of one stage is the input to the next stage, the overall gain of the cascade connection is the product of the gains of the individual op amp circuits, or

$$A = A_1 A_2 A_3 \tag{5.22}$$

Although the cascade connection does not affect the op amp input-output relationships, care must be exercised in the design of an actual op amp circuit to ensure that the load due to the next stage in the cascade does not saturate the op amp.

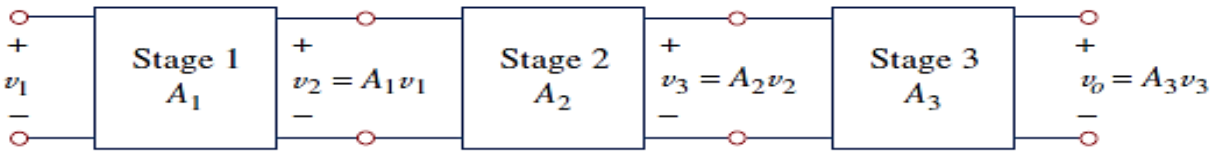

Figure 5.28
A three-stage cascaded connection.

Example 5.9

Find v_o and i_o in the circuit in Fig. 5.29.

Solution:

This circuit consists of two noninverting amplifiers cascaded. At the output of the first op amp,

$$v_a = \left(1 + \frac{12}{3}\right)(20) = 100 \text{ mV}$$

At the output of the second op amp,

$$v_o = \left(1 + \frac{10}{4}\right)v_a = (1 + 2.5)100 = 350 \text{ mV}$$

The required current i_o is the current through the 10-kΩ resistor.

$$i_o = \frac{v_o - v_b}{10} \text{ mA}$$

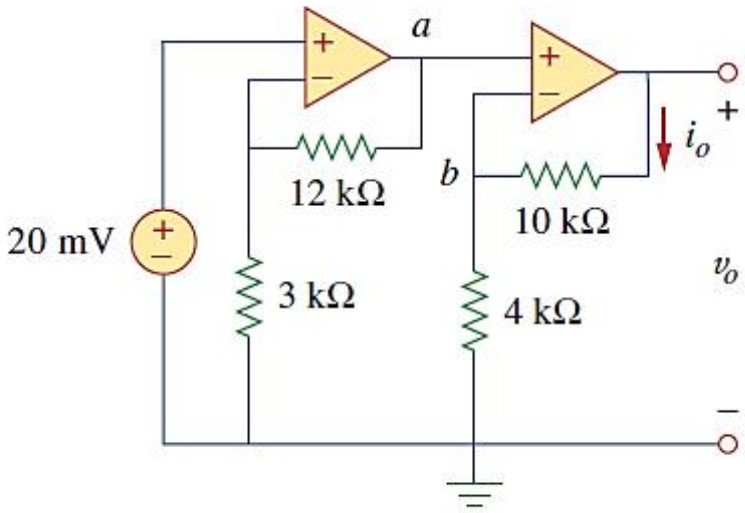

Figure 5.29
For Example 5.9.

But $v_b = v_a = 100$ mV. Hence,

$$i_o = \frac{(350 - 100) \times 10^{-3}}{10 \times 10^3} = 25\ \mu\text{A}$$

Practice Problem 5.9

Determine v_o and i_o in the op amp circuit in Fig. 5.30.

Answer: 6 V, 24 μA.

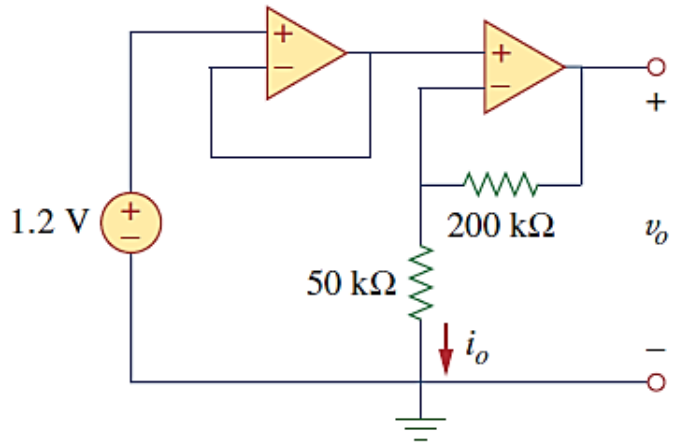

Figure 5.30
For Practice Prob. 5.9.

THANK YOU